Access Your World

Pressalit Care 3000 Special Needs Changing Table

Safety Rail Installation Drawing

Models R8510, R8511 (Child, Adult Size)

For retrofit/add-on applications. When purchased with changing table, safety rails are factory-installed. Call us at 800 577-1555 for installation support or technical assistance.

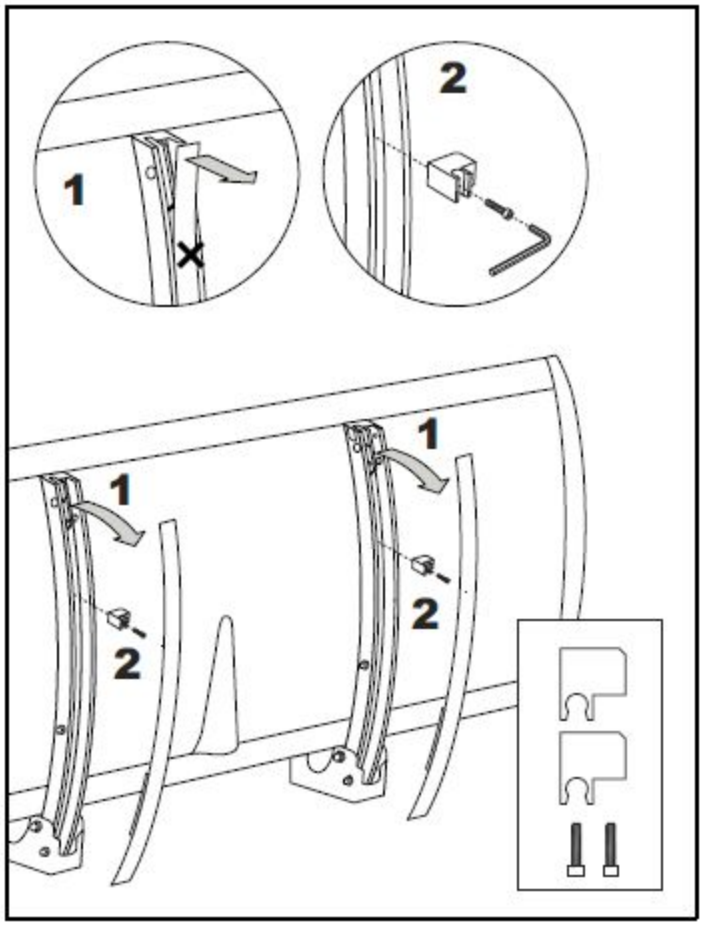

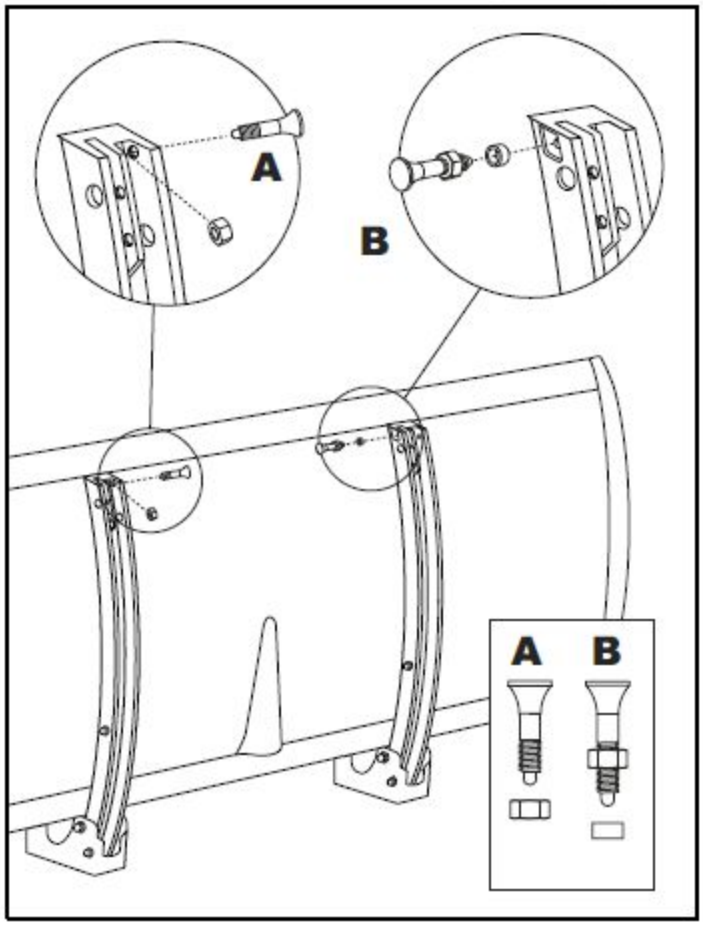

Specifications:	Child	Adult
Length	47.25”	64.5”
Height	14”	14”
Weight:	9 lbs	10.5 lbs

Materials: Aluminium, polyurethane foam, plastics

Functionality: The safety rail can be folded easily up or down using only one hand.

Subject to change without further notice

www.max-ability.com 800-577-1555 Fax: 707-575-3856 email: Info@max-ability.com

pub. Jan. 2016

Pressalit Care 3000 Safety Rail Installation Drawing

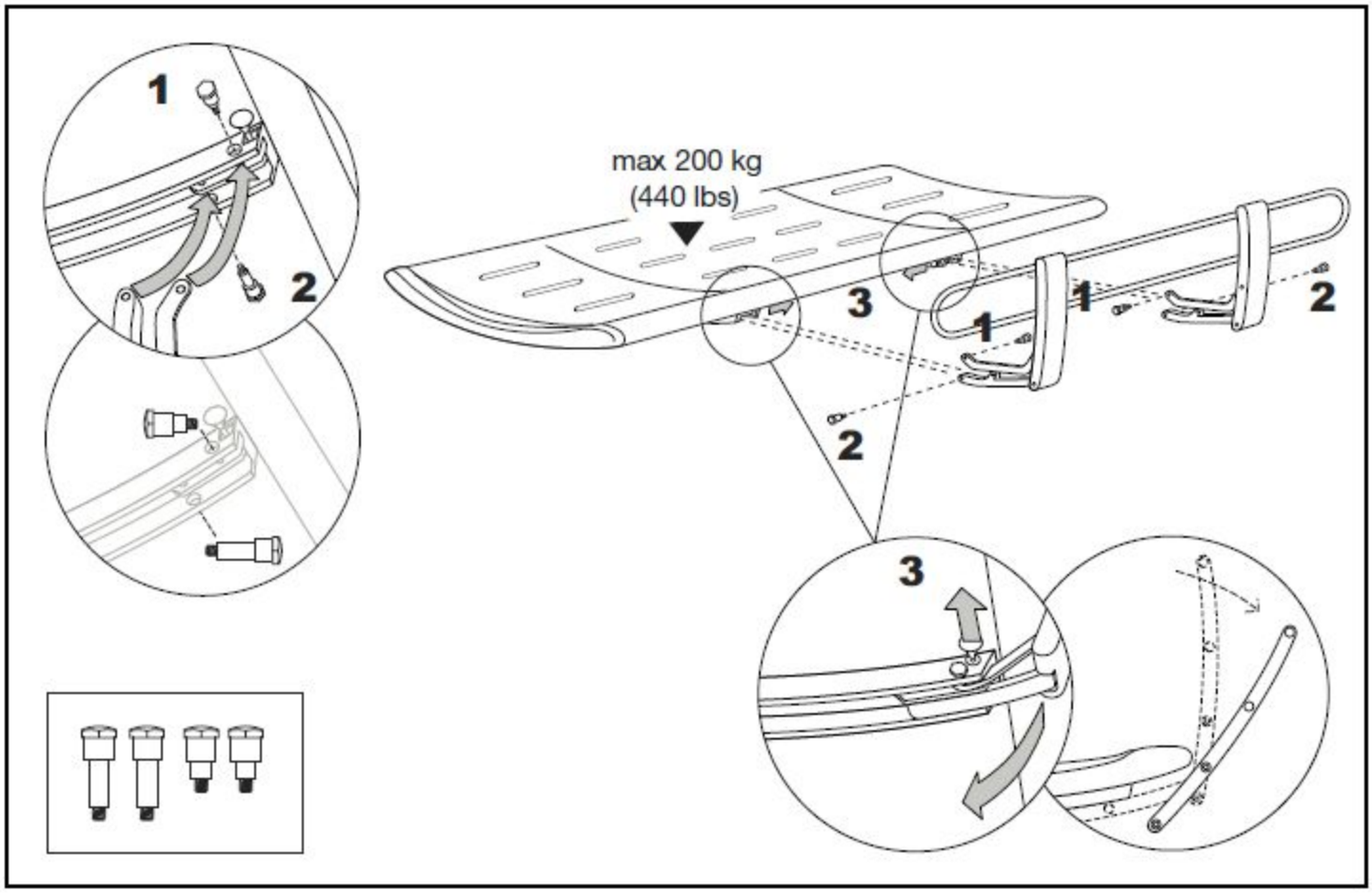

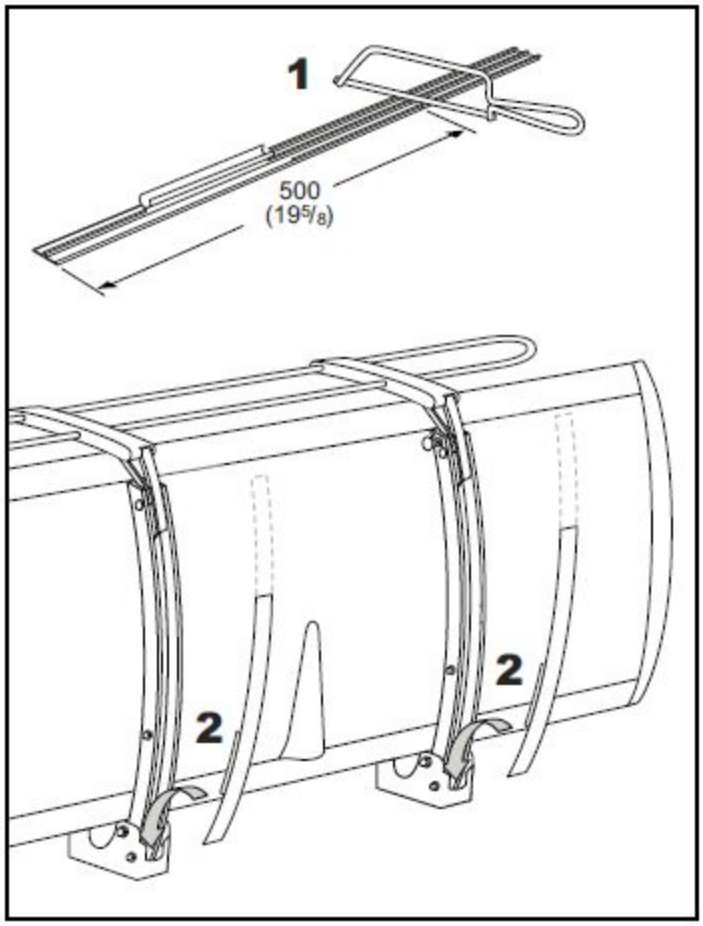

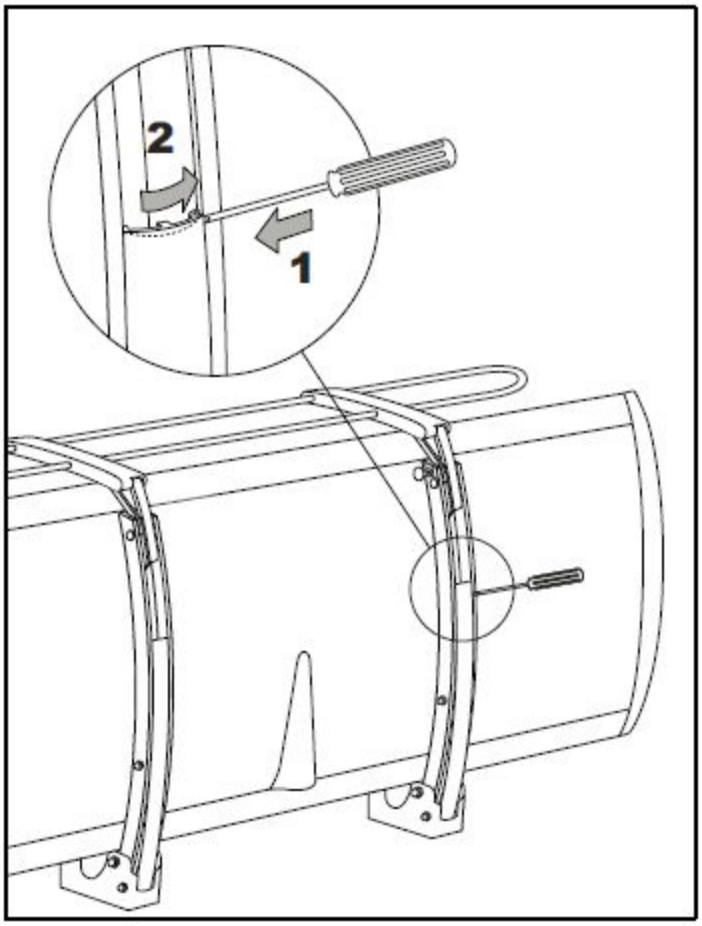

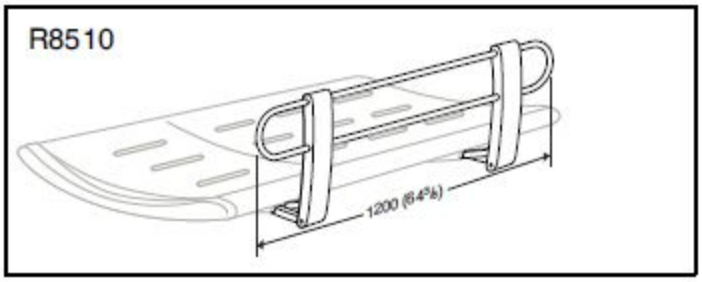

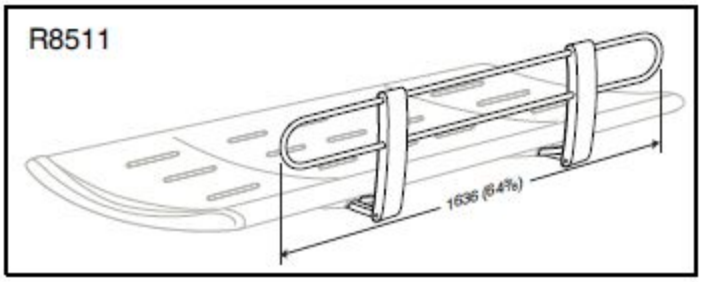

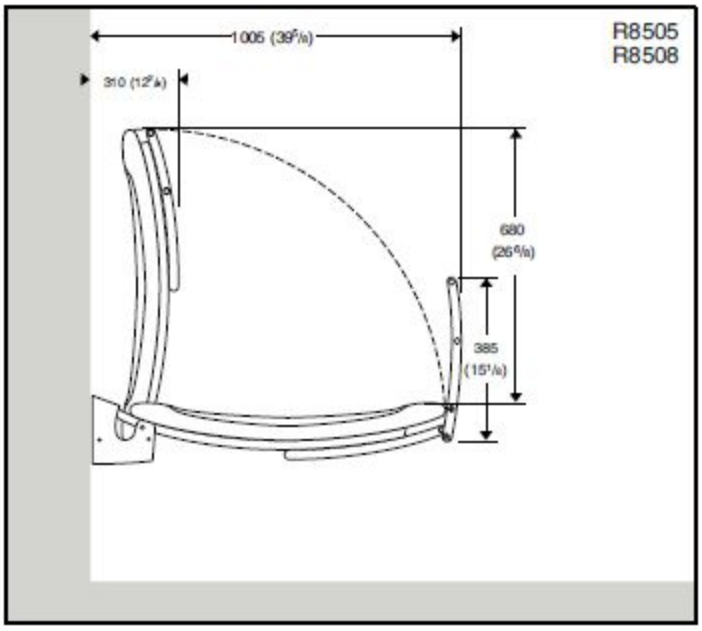

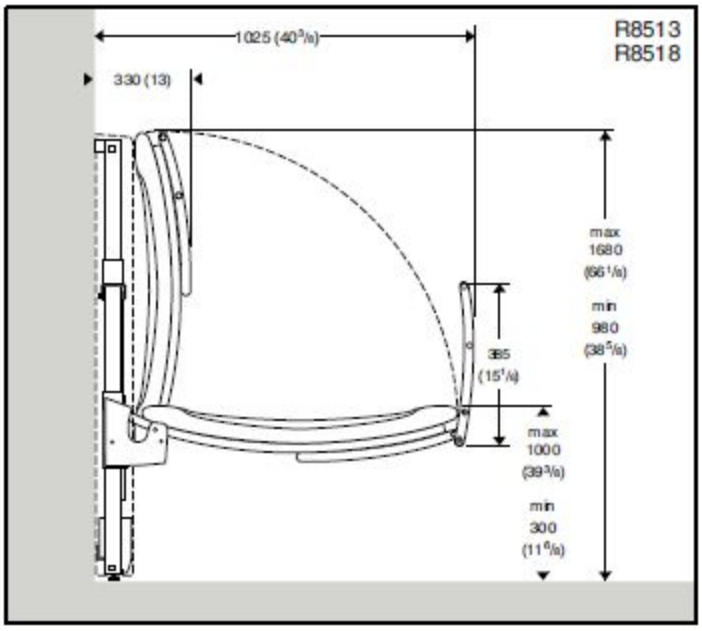

Cleaning: Remove chalky deposits and debris from wall tracks and other aluminum parts with a solution of 2 tablespoons white vinegar in 1 quart tap water. Rinse with a damp cloth wrung out in clear water. Avoid cleaners that polish, corrode, or contain chlorine.

Subject to change without further notice